REVISIONS				
ZONE	REV	DESCRIPTION	DATE	APPROVED

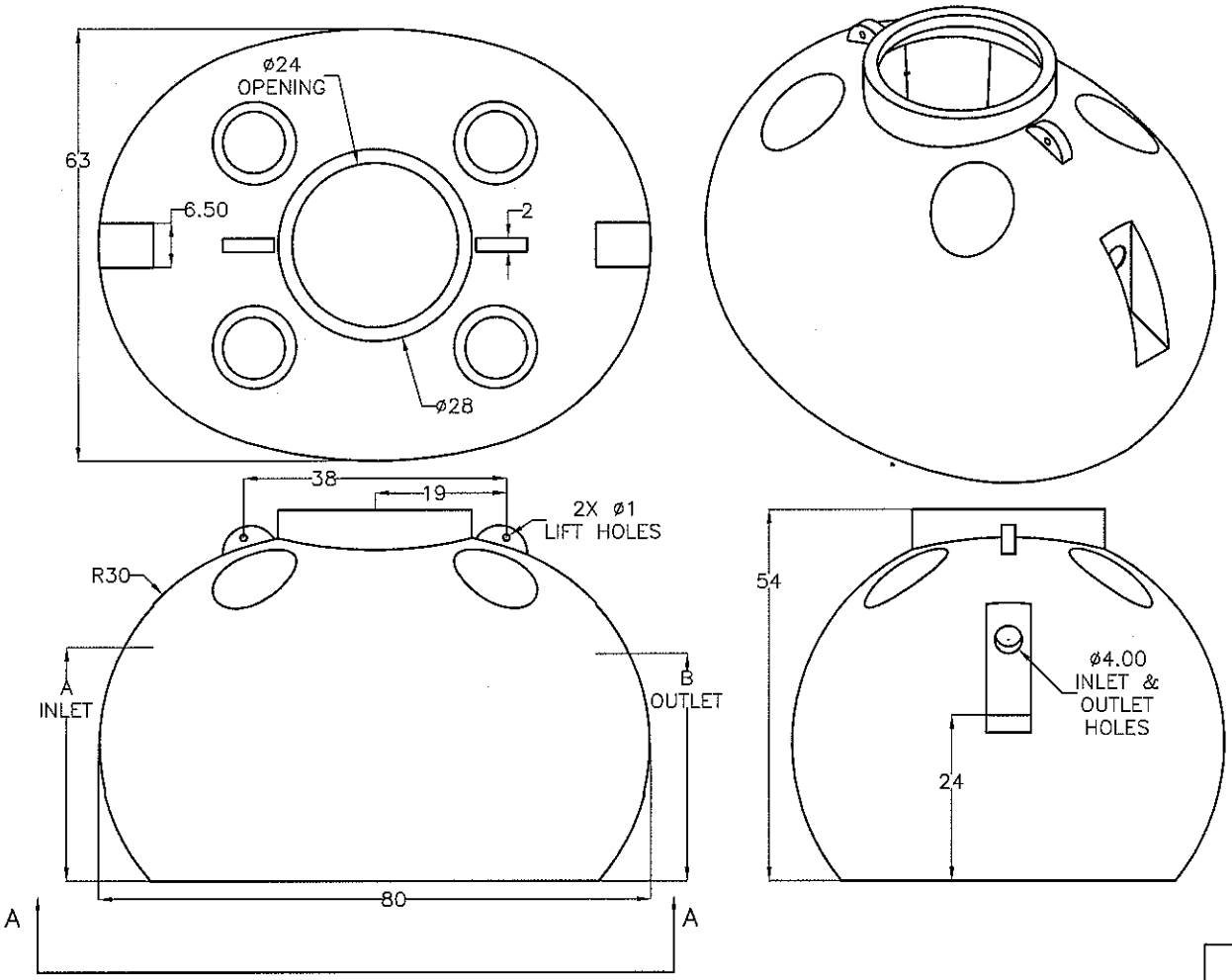

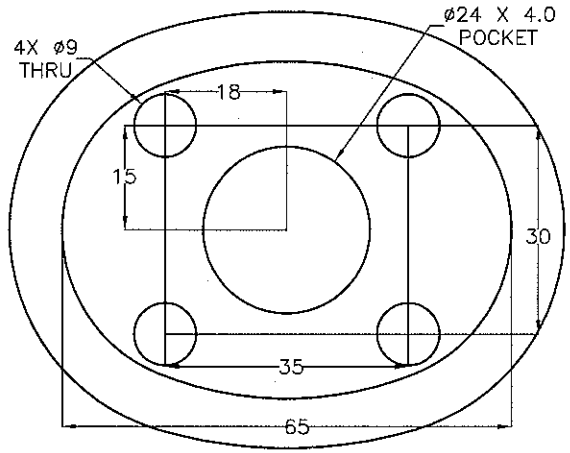

VIEW A–A

	NORWESCO ST. BONIFACIUS, MN			
	500 GALLON PUMP TANK			
JTP 31JAN06	SIZE B	FSCM NO.	DWG NO.	REV
	SCALE 1/20		SHEET	