REVISIONS				
ZONE	REV	DESCRIPTION	DATE	APPROVED

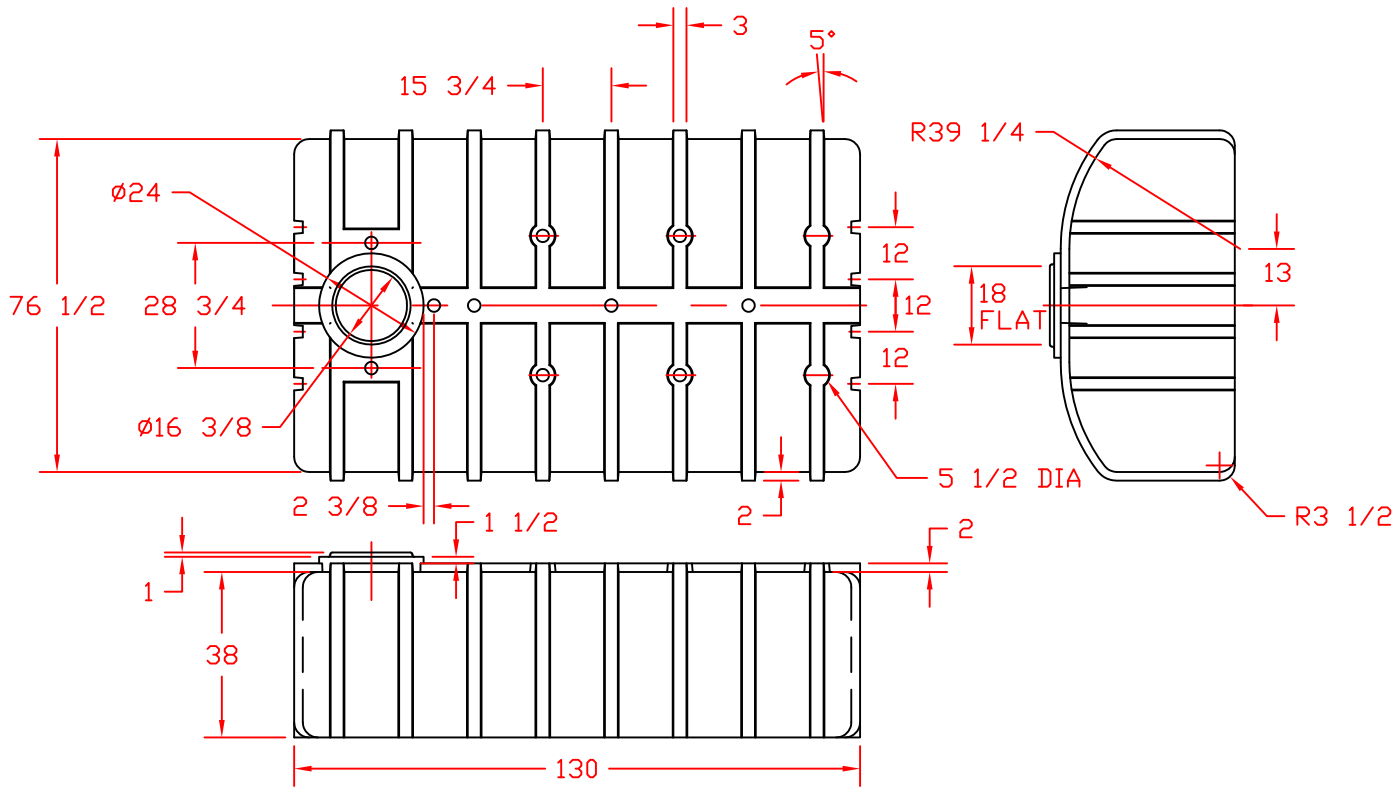

NOTES:
1. END RIBS 3"W X 2" DEEP

FOB FAIRFIELD TX

NORWESCO
ST. BONIFACIUS, MN

1500 LOW PROFILE
WATER TANK

JTP 09MAY00	SIZE B	FSCM NO.	DWG NO.	REV
	SCALE 1/32		SHEET	