| REVISIONS | | | | |
|---|---|---|---|---|
| ZONE | REV | DESCRIPTION | DATE | APPROVED |
| | A | UPDATE TO PRODUCTION | | 08SEP06 |

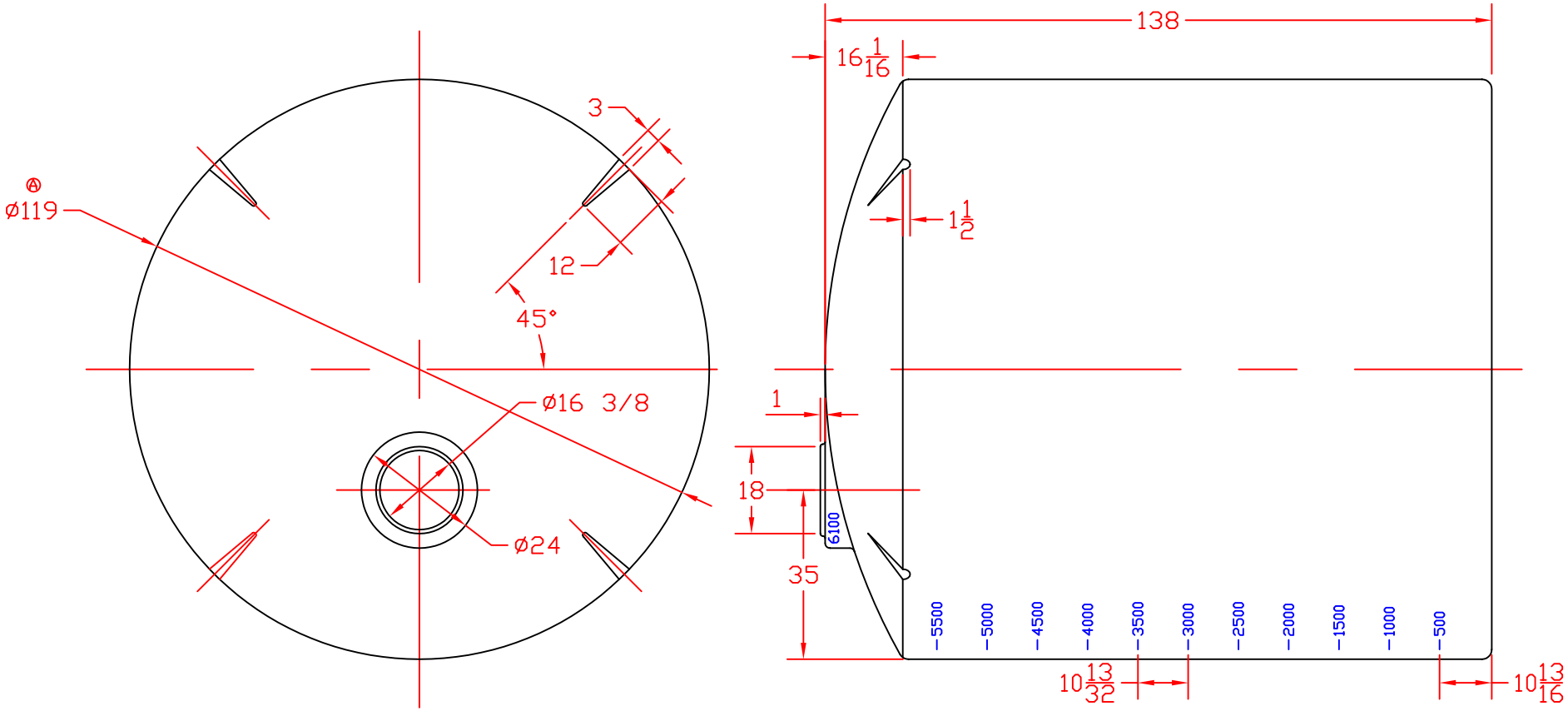


NORWESCO
ST. BONIFACIUS, MN

6100 GALLON VERTICAL STORAGE TANK

| | | | | |
|---|---|---|---|---|
| JTP 19MAY95 | SIZE B | FSCM NO. | DWG NO. | REV A |
| | SCALE 1/24 | | SHEET | |