REVISIONS				
ZONE	REV	DESCRIPTION	DATE	APPROVED
	A	DIMENSION ADDED	24JAN05	

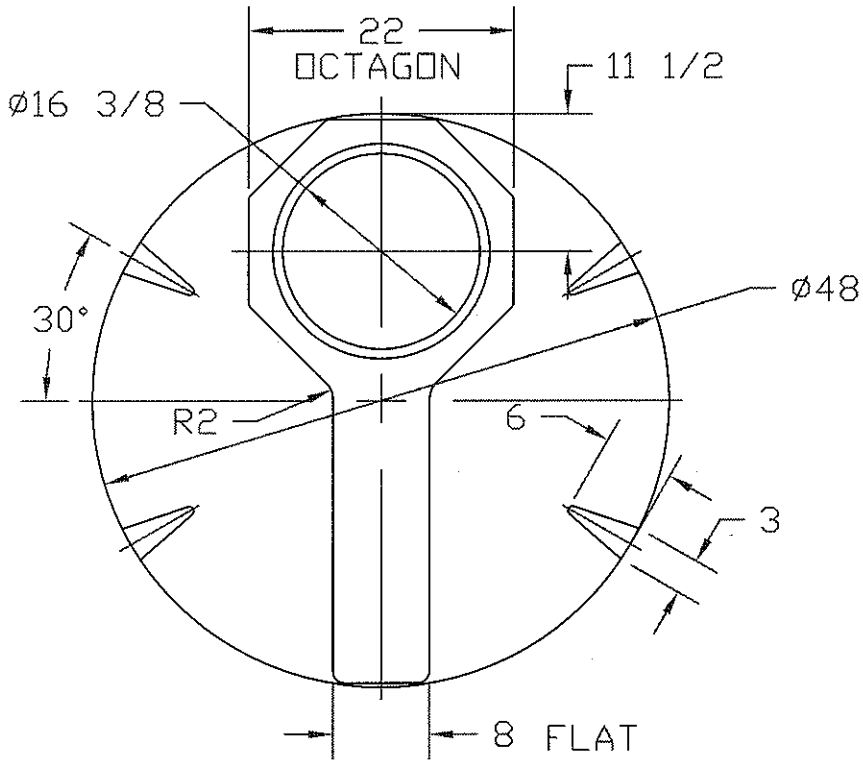

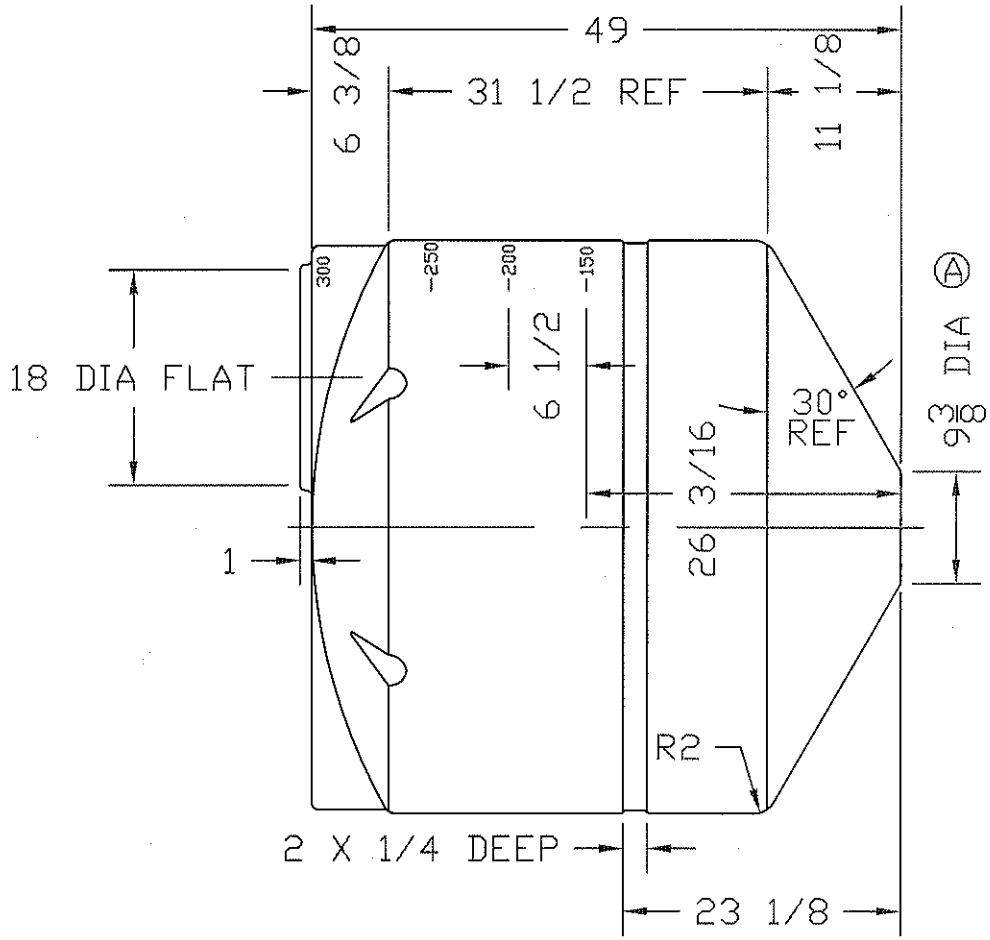

NORWESCO
ST. BONIFACIUS, MN

300 GALLON CONE BOTTOM TANK

JTP 15APR97	SIZE A	FSCM NO.	DWG NO.	REV A
	SCALE 1/16		SHEET	